# Connecting the Pieces

## Turning metering data into smarter, better-performing buildings

**Chris Bishop, DMS Metering Solutions | Laura Bishop, HI Group - Stand B21**

Smart Buildings Show, 2026

DMS METERING SOLUTIONS

&

HI GROUP

# Chris Bishop and DMS Metering Solutions

Technical expertise across metering, communication and commissioning

DMS METERING SOLUTIONS

Chris Bishop is Technical Director at DMS Metering Solutions and brings extensive experience in metering technology, communication systems, commissioning and data collection infrastructure.

He has supported the delivery of complex, multi-utility metering projects across the building services, energy and facilities management sectors, helping clients develop reliable, compliant and practical solutions.

Chris specialises in connecting metering devices with data collection and building management platforms, providing technical guidance on meter selection, communication protocols, system design and commissioning.




## DMS helps projects connect the full metering chain:

- **Metering**
  Heat, water, gas, electricity, steam and process
- **Services / Data Collection**
  On-site support, commissioning and verification
- **Ancillaries**
  Valves, regulators, meter boxes, modules and displays



DMS METERING SOLUTIONS

# ABOUT US

- Established in 2000, with sustained growth for over 25 years.
- Primarily a provider of multi utility metering solutions for the Utility, Building Services, Facilities & Energy Management sectors.
- Business founded on the premise of providing best in class customer service and technical support.
- Exclusive UK supply arrangements and appointed channel partner with world leading manufacturers.

- Next Day Delivery
- 24-Hour Quotations
- Dedicated Technical Support
- On-site Technical Support
- Commissioning
- Product and Application Training

# The right data starts with the right meter

Meter selection should be driven by application, environment and output requirements

DMS METERING SOLUTIONS

- Heat
- Water
- Gas
- Electricity
- Renewables
- Heat Networks

## Selection factors

- Application profiles
- Accuracy and approval requirements
- Power supply and access
- Communication output
- Installation locations
- Future reporting needs

**A meter is only smart when its data drives action and value.**

DMS METERING SOLUTIONS

# A practical route from meter selection to verified performance

1

## Select

Choose meters for the application, output and compliance need.

2

## Connect

Pick the communication method that suits the site.

3

## Collect

Bring multi-utility data into one reliable platform.

4

## Use

Turn readings into insight, alerts, billing and improvement.

# The connected-building journey

How metering becomes meaningful performance data







**Meter selection** → **Communication** → **Data collection** → **Analysis** → **Action** → **Verified performance**

**When one part is missing, the building loses visibility.**

# Choosing the communication method

Each technology has a role. The best choice depends on the site, not just the specification.

DMS METERING SOLUTIONS

## M-Bus

**Best for**

Dedicated metering networks

**Key point**

Reliable multi-meter data collection

## Modbus/BACnet

**Best for**

BMS and control systems

**Key point**

Faster response and structured data

## Wireless M-Bus

**Best for**

Simple retrofit with minimal installation effort

**Key point**

Reduces cabling where access is difficult

## LoRaWAN

**Best for**

Long Distances

**Key point**

Long-range wireless with central visibility

**Decision checklist: speed, distance, wiring, maintenance, data quality and future reporting.**

# Case study: AstraZeneca, Cambridge

Design change to simplify integration and create a dedicated heat-metering platform



## Challenge

- Complex R&D site
- Multiple heat-meter points
- Need for reliable dedicated data

## Solution from DMS

- Standalone M-Bus heat-metering platform
- Less engineering at BMS location
- Simpler route for meter data

## Outcome

- Reduced integration complexity
- One platform for heat-meter data
- Clearer and more consistent readings

**Lesson: communication choices should be made around the whole network design.**

# Case study: Rampton Hospital, Retford

Moving from legacy pulse readings to long-range wireless visibility



## Before: legacy pulse network

- Extensive cabling
- Multiple controllers across site
- Data loss when power is interrupted
- Regular engineer attendance

## After: LoRaWAN

- No site-wide cabling required
- All data sent to a central point
- BMS and cloud-portal integration
- Automated alerts for faults

**Outcome: from reactive troubleshooting to remote, proactive monitoring.**

For a copy of today's presentation, please visit us at **Stand B21**

**Over to you, Laura.**

Smart Buildings Show,
2026

DMS METERING SOLUTIONS

&

HI GROUP

HI GROUP

# Preparing for HNTAS



www.higroupltd.co.uk

INTRODUCTION

# About Me



**Laura Bishop**
**Business Co-Founder**

Laura is a Chartered Mechanical Engineer and CIBSE Fellow with 25 years' experience in blue chip engineering companies.

She founded Infinitas Design Ltd in 2014 to provide design & development services to the commercial & industrial heat pump and heat network sector

She co-founded Hillside Infinitas Ltd in 2023, which funds and delivers low carbon projects

She currently serves as Co-Chair and Director of the Heat Pump Association UK having previously chaired the GSHPA for 5 years

Laura has worked with DMS for over 10 years, deploying their metering solutions on RHI and subsequent projects

INTRODUCTION

# About HI Group

1. Decades of experience in energy, sustainability, and multi-site operations
2. Proven track record delivering award-winning decarbonisation projects
3. Local presence in Nottingham with nationwide reach
4. Integrated approach: advisory, design, installation, and ongoing support
5. Focus on delivering fundable, cost-effective, and scalable solutions

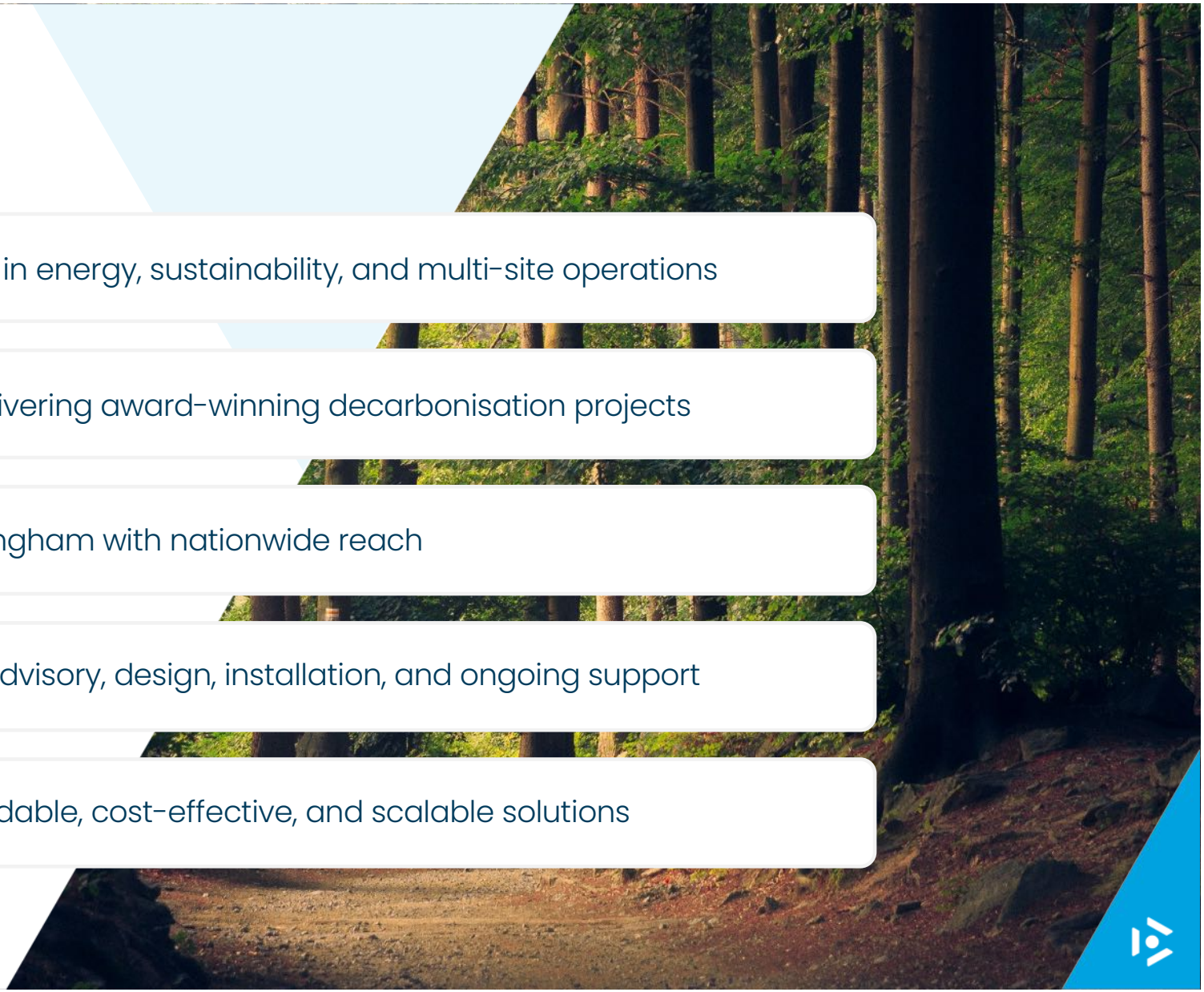

# The Importance of Metering - 1

**The Performance Gap**

How do clients and owners know that what is installed is working and performing as expected?

How do they know financial investments are paying back?

Metering can be value engineered out.....

.....Or never switched on

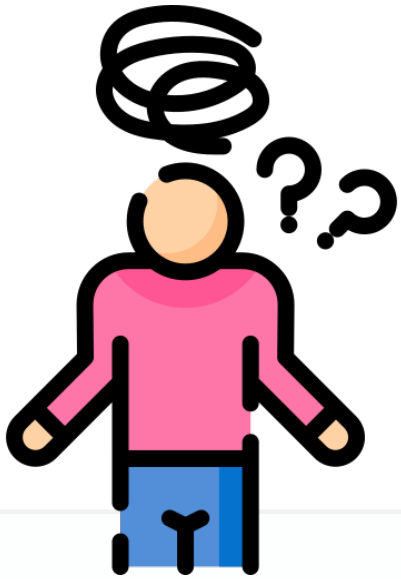

**On heat networks, is heat too expensive due to inefficiencies**

High bills

Poor performance

Higher carbon emissions

Unhappy heat buyers/offtakers

# The Importance of Metering 2

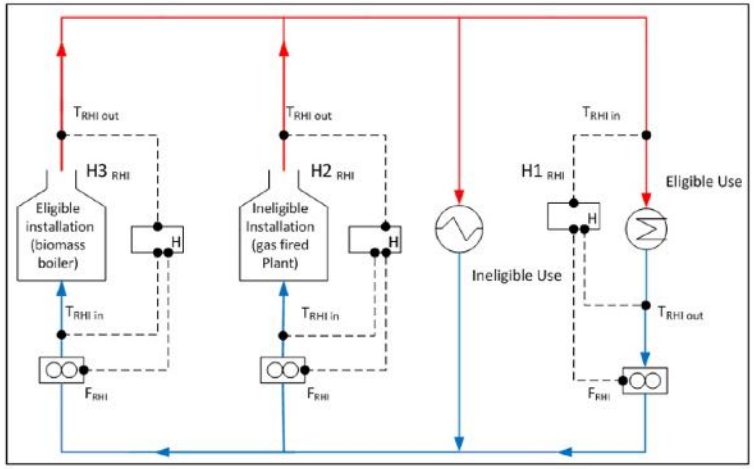


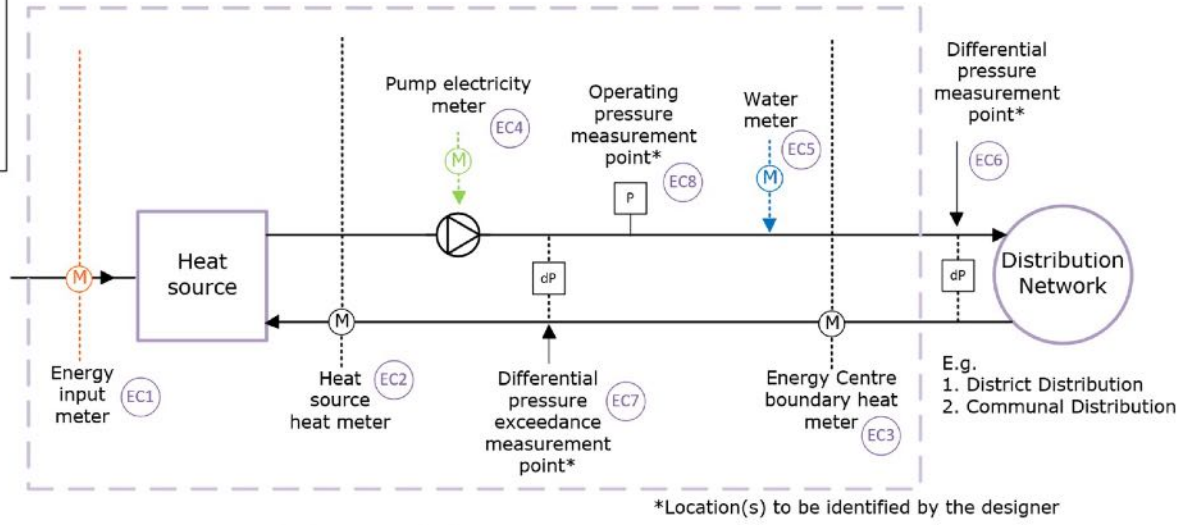

CASE STUDY ONE

# GCZERO

**Client:** Gloucestershire College
**Project Value:** £5.5 million (50% Salix-funded)
**Scope:** Multi-campus decarbonisation (RIBA Stages 2 – 7, ongoing)
**Services:** Full design, procurement, project management, stakeholder engagement, and operational optimisation

**Metering:**
- Solar PV generation
- Heat pump heat generation
- Heat pump electrical consumption
- Total site electrical consumption
- Gas boiler heat generation
- DHW immersion consumption



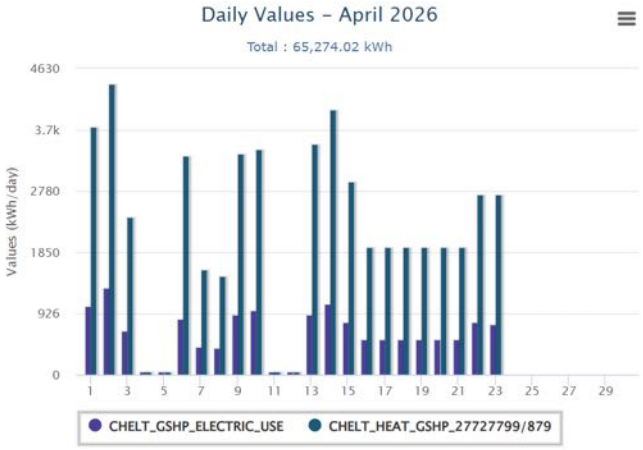





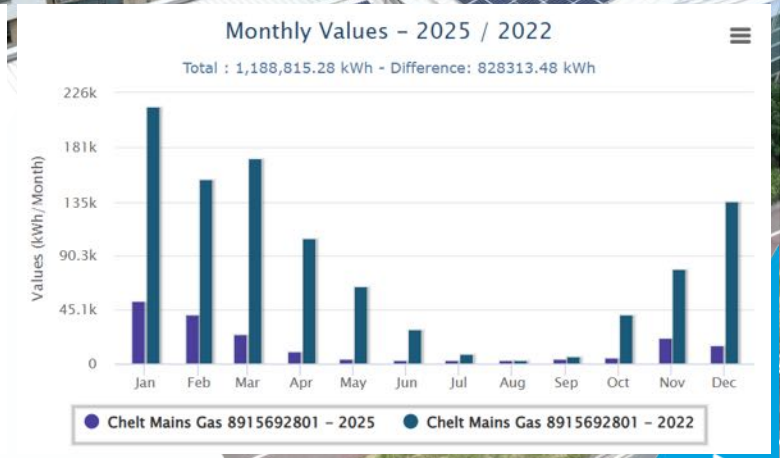

# Thank You From

HI GROUP

DMS METERING SOLUTIONS

**Stand B21**

hello@higroupltd.co.uk

0331 6309060

sales@dmsltd.com

01773 534 555

